SNAP 50 Metal Deck Plate

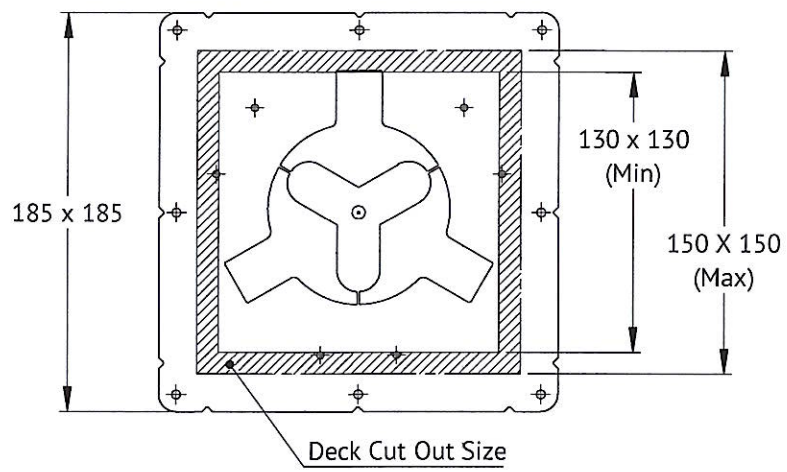

SNAP 110 Metal Deck Plate

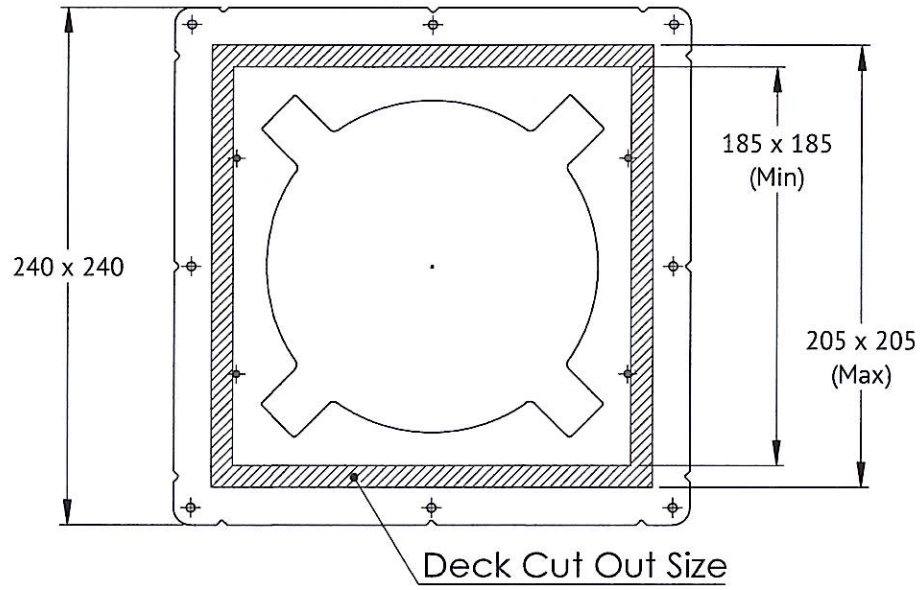

SNAP 65 Metal Deck Plate

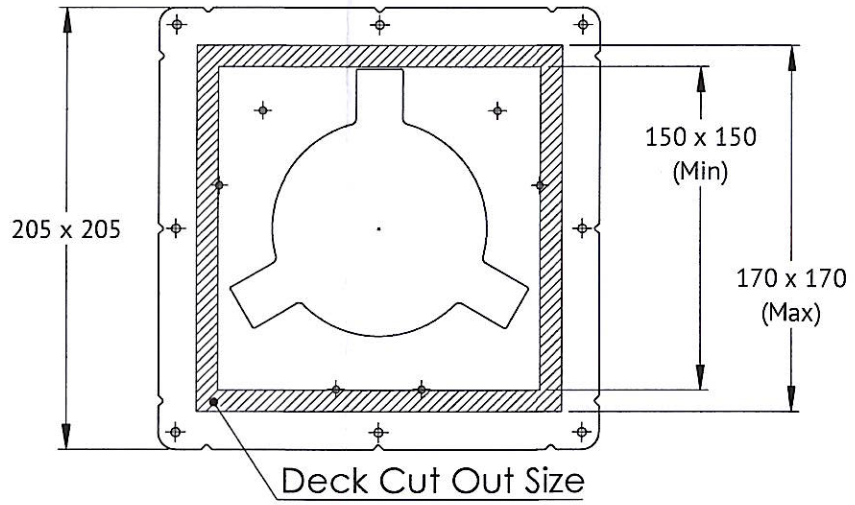

SNAP 100 Metal Deck Plate

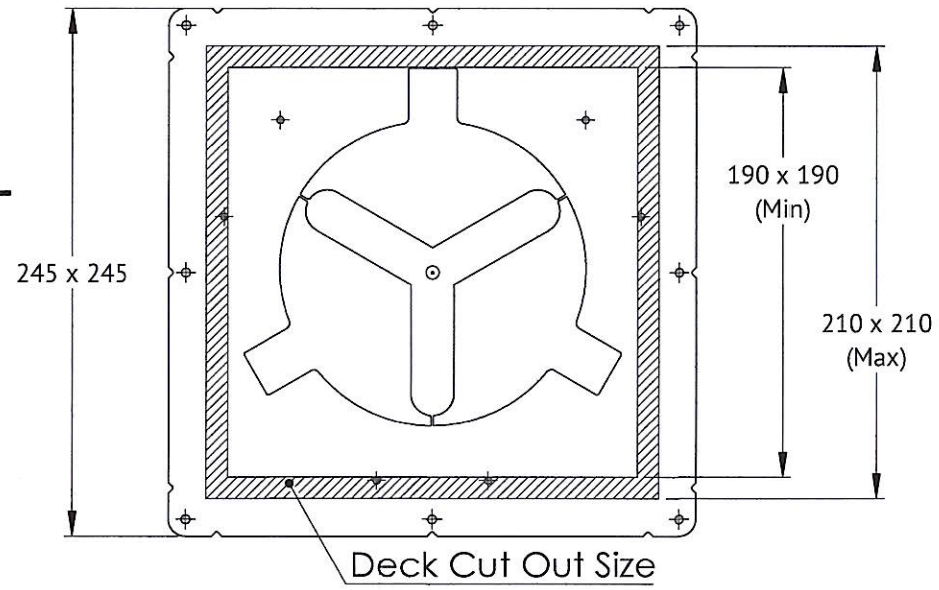

SNAP UL100 Metal Deck Plate

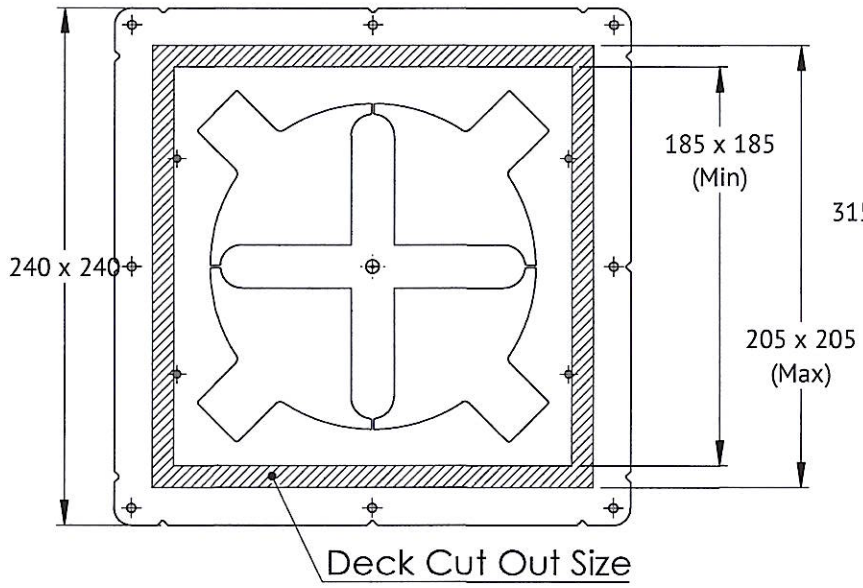

SNAP 150 Metal Deck Plate

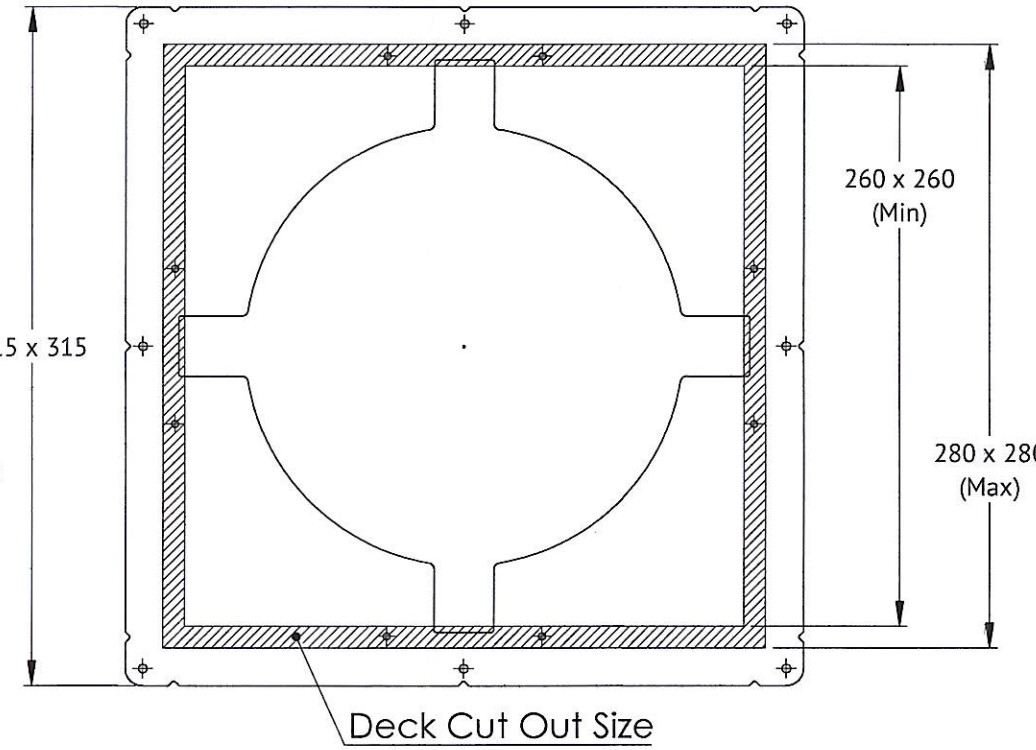

Cast In Collar Size	Stock Code	Description	Minimum Cut Out	Maximum Cut Out
50	M-DP50	SNAP 50 Metal Deck Plate	130 x 130	150 x 150
65	M-DP65	SNAP 65 Metal Deck Plate	150 x 150	170 x 170
100	M-DP100	SNAP 100 Metal Deck Plate	190 x 190	210 x 210
UL100	M-DPUL100	SNAP UL100 Metal Deck Plate	185 x 185	205 x 205
110	M-DP110	SNAP 110 Metal Deck Plate	185 x 185	205 x 205
150	M-DP150	SNAP 150 Metal Deck Plate	260 x 260	280 x 280

SNAP Fire Collars
The only smoke and fire collar.

Snap Fire Systems
1343 Wynnum Rd, Tingalpa, QLD, 4173, Australia
☎ 1300 76 46 26
☎ +61 (0)7 3390 5420
+61 (0)7 3348 9417
info@snapcollars.com.au
www.snapcollars.com.au

REVISION	DRAWN	DATE	CHK'D	DATE	APPV'D	DATE	DESCRIPTION
0	AM	07/02/19	GD	07/02/19	MD	07/02/19	RELEASED FOR INSTALL.
1	AM	23/01/20	GD	23/01/20	MD	23/01/20	ADDED SNAP 110 Metal Deck Plate.
2	AM	24/11/21	CO	24/11/21	MD	24/11/21	Update product Stock Codes in table. Change ID 129.
3	AM	26/05/22	CO	26/05/22	MD	26/05/22	Pictorial update to M-DP50 & M-DP100. Change ID 133.
4	AM	19/12/22	BV	19/12/22	MD	19/12/22	ADDED SNAP UL100 Metal Deck Plate.
5	AM	19/02/26	BM	19/02/26	MD	19/02/26	Added outside notches to indicate average cutout location. Change ID 262.

UNCONTROLLED WHEN PRINTED

GENERAL LINEAR TOLERANCES UNLESS OTHERWISE SPECIFIED:

MM:	Medium (m)
0.5-6	X ±0.1
6-30	X ±0.2
30-120	X ±0.3
120-400	X ±0.5

MATERIAL: 0.95mm GALV G2 Z275

TITLE: SNAP 50 Metal Deck Plate

DWG NO. INS-DP-DRW

A3

SCALE:1:3.5

DO NOT SCALE DRAWING | REVISION 5 | SHEET 1 OF 1